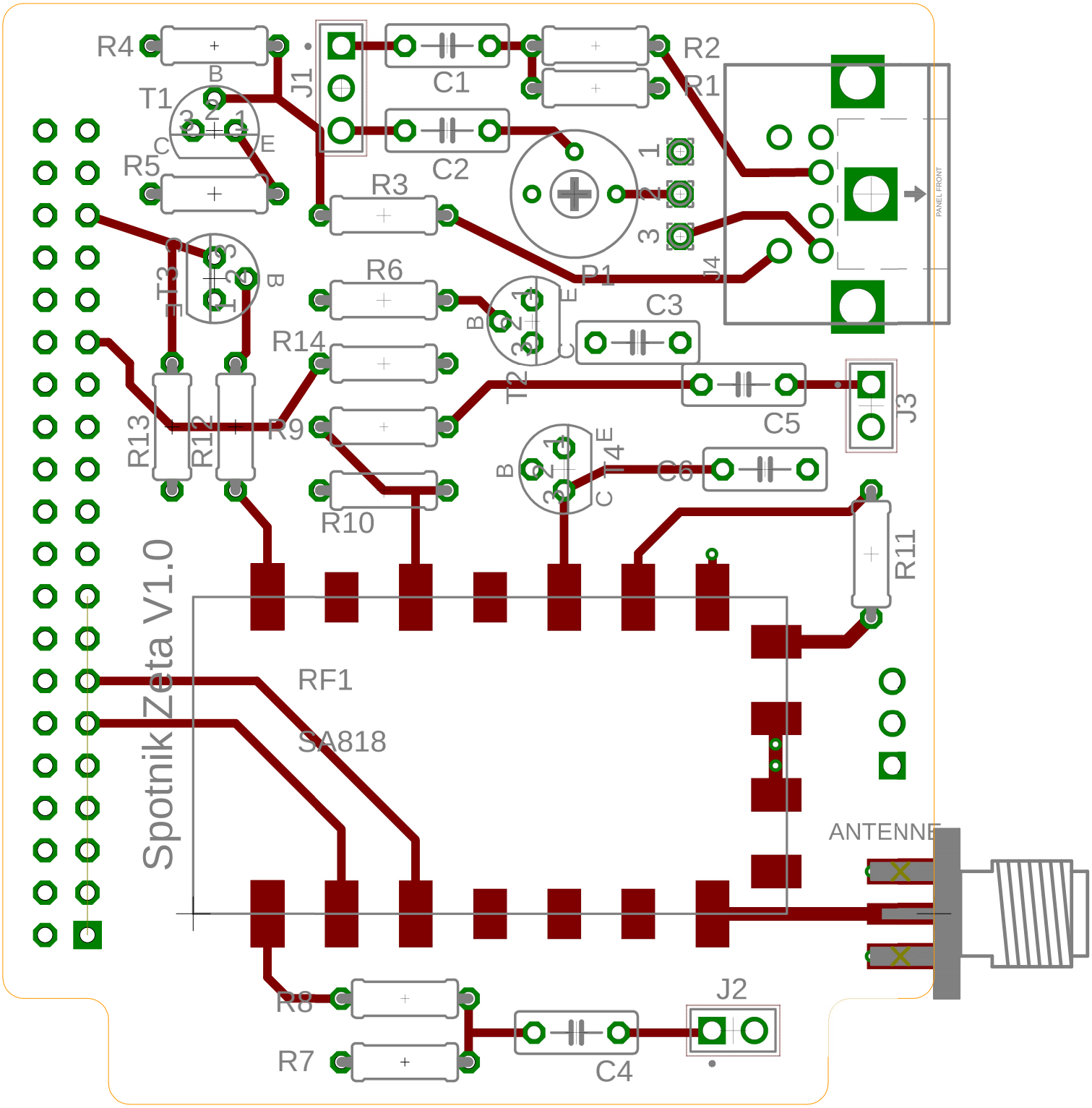

R4
T1
B
C
E
R5
J1
C1
C2
R2
R1
R3
P1
J4
PANEL FRONT
T3
R6
C3
R14
T2
C5
J3
R13
R12
R9
T4
C6
R10
R11
Spotnik Zeta V1.0
RF1
SA818
ANTENNE
R8
R7
C4
J2